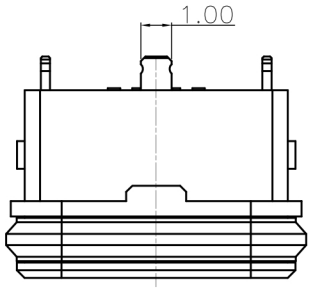

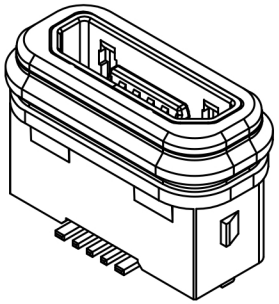

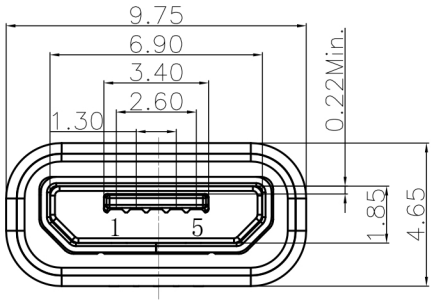

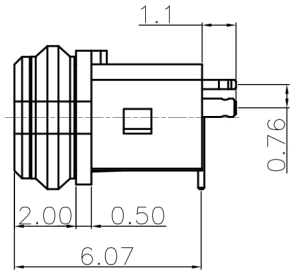

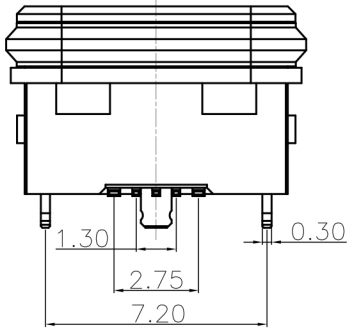

1.Material/Plated
1.1 Housing:LCP,Black UL 94V-0.
1.2 Plastic Hood:LCP,Black UL 94V-0.
1.3 Terminal:Copper Alloy,Gold Flash Plated At Contact Area, Tin Plated At Solded Area, Nickel Underplated Overall
1.4 Shell:Stailess steel,Tin/Nickel plated Overall
1.5 Seal Ring:Silica gel
1.6 Glue:Black
2.Electrical Performance
2.1 Rated Voltage: 30V AC
2.2 Rated Current: 1,5Pin: 3.0A Max. 2,3,4Pin: 1.0A Max.
2.3 Contact Resistance: 30mΩ Max.
2.4 Insulation Resistance: 1000MΩ Min.
2.5 Dielectric Strength: 100V AC
3.Mechanical Performance
3.1 Insertion Force: 35N Max.
3.2 Withdraval Force: 8-35N
3.3 Durability: 10000 Cycles
4.Operating Temperature: -25° C To +85° C
5.Waterproof: IPX8

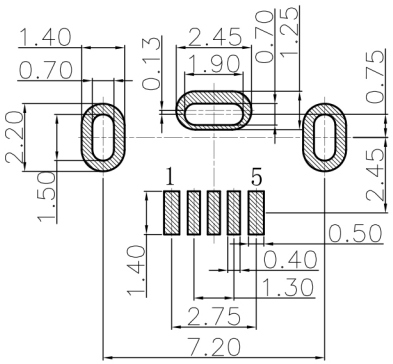

PCB LAYOUT

REV.	DESCRIPTION	ECN NO.	NAME	DATE
A	NEW RELEASE		Tom	2019-07-31

REVISIONS

DRAWN	Tom	2019-07-31
CHECKED	Ango	2019-07-31
APPROVE	Kevin	2019-09-18
SCALE: N/A	SHEET: 1 OF 1	

DIMRNSION TOLERANCE
X
X.X ±0.35
X.XX ±0.25
X.XXX ±0.15
GENERAL ANGLE:±3°
UNIT: mm
LEVEL C31

东莞市神久电子科技有限公司
Dongguan Shenjiu Electronic Technology Co., Ltd

TITLE	MICRO USB B 5P ST WATERPROOF
PART NO.	UMX-023W1AP
DWG. NO.	

TK-RD-001A